BREAKFAST CABINET SET 86

PROFIL with IR-sensor | 4000K | CRI>90 | alu
Product code: 96305

An extremely low and efficient profile fixture with an IR switch

LIMENTE PROFIL LUX-IR is a part of LIMENTE LUX collection.The LIMENTE LUX collection provides the best quality of light in technical features, such as efficiency and color rendering, and maximizes the lifespan of the product. PROFIL LUX-IR is a simple and cost-efficient choice to light up your breakfast cabinet! The led profile is available in five different standard lengths. The fixture has an IP44 classification, which makes it possible to be installed also under a drying cabinet. Due to the excellent light output, the profile fixtures can be placed even 60-80cm apart! You'll receive excellent light on your cooktop, when the fixtures are placed on both sides of the cooker hood.

LIMENTE PROFIL LUX-IR has a perfect color rendering (Ra>90). The fixture has a light output of 1100 lm/m and a color temperature of 4000K. Due to the excellent technical values, our LUX models reproduce natural colors optimally, which really makes colors come alive! The products in our LIMENTE LUX collection are all granted with a three-year additional warranty in addition to our two-year warranty granted for all our products.

Learn more from our website

Lighting control

LIMENTE PROFIL LUX-IR is not dimmable with separate dimmers. The fixture has an integrated on/off switch, which is activated with a wave of a hand.

Easy Installation

LIMENTE PROFIL LUX-IR is fast and easy to install with the installation accessories included. The fixture has an integrated IR switch, so no separate light switch is needed.

Learn more from our website

THE FOLLOWING ITEMS ARE INCLUDED

- Profil LUX IR 86
- driver 30W

BREAKFAST CABINET SET 86-IR

OVERVIEW

PRODUCT CODE	96305
GTIN-CODE	6438400004511
ELECTRICAL NUMBER	
ETIM GENERAL NAME	
ETIM CLASS	
ETIM GROUP	
COLOUR	Alulook
LAMP TYPE	LED

SPECIFICATIONS

PRODUCT DIMENSIONS	565.0 x 17.0 x 9.0
MOUNTING METHOD	Surface mounting
COLOUR TEMPERATURE	
COLOUR RENDERING INDEX CRI	> 90
RATED LIFE TIME	35.000h (L80B10)
ENERGY EFFICIENCY CLASS	
LUMINOUS FLUX	891 lm
EFFICIENCY	50 lm/W
VOLTAGE	24 V DC
INGRESS PROTECTION CODE	IP44/IP20
NUMBER OF LEDS/M	
INPUT POWER	18 W
NUMBER OF SWITCHING CYCLES	
AMBIENT TEMPERATURE RANGE	
INPUT POWER CONNECTOR	
WARRANTY PERIOD (MONTHS)	24
ADDITIONAL COVER (MONTHS)	36
INSTALLATION AND OPERATING MANUAL	https://www.limente.fi/Images/productpics/instructions/limente_led-profil-lux-ir.pdf

BREAKFAST CABINET SET 86-IR

LIMENTE PROFIL LUX-IR 86

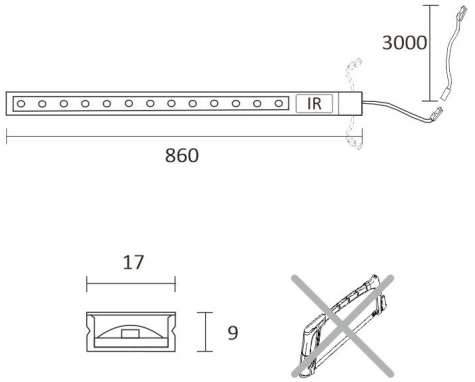

LIMENTE 28030

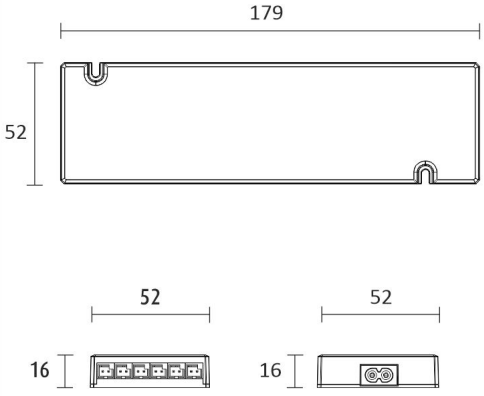

BREAKFAST CABINET SET 86-IR
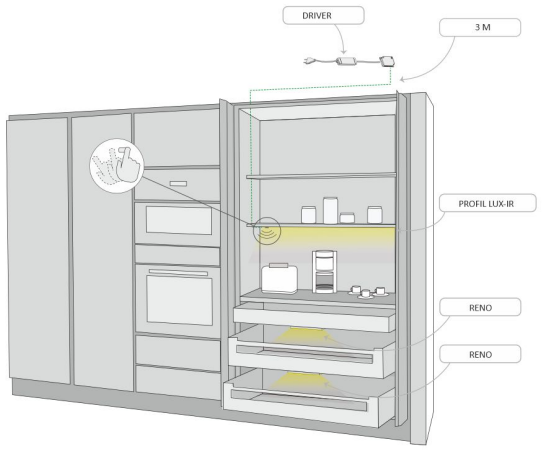
Profil LUX IR