KIT-RIBBON 2M + DRIVER

12 V | 4000K | IP44 | 120 led/m | 1080lm/m | Ra>80
Product code: 96220

THE FOLLOWING ITEMS ARE INCLUDED

KIT-RIBBON 2M + DRIVER

OVERVIEW

PRODUCT CODE	96220
GTIN-CODE	6438400003231
ELECTRICAL NUMBER	
ETIM GENERAL NAME	
ETIM CLASS	
ETIM GROUP	
COLOUR	White
LAMP TYPE	

SPECIFICATIONS

PRODUCT DIMENSIONS	2000.0 x 10.0 x 3.0
MOUNTING METHOD	Surface mounting
COLOUR TEMPERATURE	
COLOUR RENDERING INDEX CRI	
RATED LIFE TIME	
ENERGY EFFICIENCY CLASS	
LUMINOUS FLUX	2160 lm
EFFICIENCY	
VOLTAGE	12 V DC
INGRESS PROTECTION CODE	IP44
NUMBER OF LEDS/M	
INPUT POWER	28 W
NUMBER OF SWITCHING CYCLES	
AMBIENT TEMPERATURE RANGE	
INPUT POWER CONNECTOR	
WARRANTY PERIOD (MONTHS)	24
ADDITIONAL COVER (MONTHS)	
INSTALLATION AND OPERATING MANUAL	https://www.limente.fi/Images/productpics/instructions/limente_led-ribbon.pdf

KIT-RIBBON 2M + DRIVER
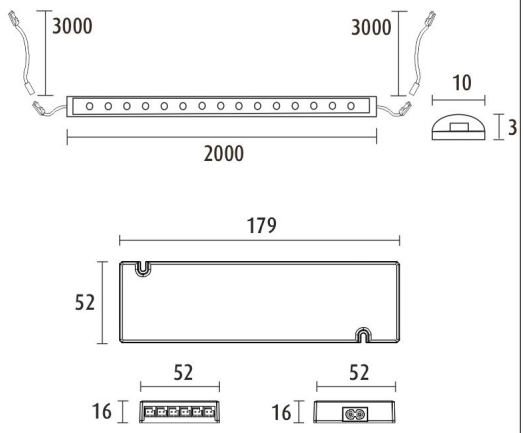
LIMENTE LED-RIBBON + DRIVER (96220)