LUXOR

4000 K | IP44 | black | 192 led/m | 1512 lm/m | CRI>85
Product code: 68832

Light directing corner profile

Dimming and lighting control

Appropriate lighting for any occasion is made easy with our dimming and lighting control system. You can easily change the lighting and ambience in your home from efficient and bright to dim and cozy by dimming your LIMENTE LUXOR with our wireless system. You can use the same switch to adjust all the LIMENTE lights in the room, including various ceiling, panel and profile lights. The light adjusts smoothly at the same time while creating ambience for working, entertaining or any mood in between.

Learn more from our website

Easy installation

THE FOLLOWING ITEMS ARE INCLUDED

- black aluminum profile 2 m x 2
- end pieces x 8
- fasteners x 12
- led-ribbon 4 m, with driver in both ends
- 3m power cords 2 pcs

LUXOR 40 COM 4K BL PROF.LIGHT

OVERVIEW

PRODUCT CODE	68832
GTIN-CODE	6438400003828
ELECTRICAL NUMBER	4139838
ETIM GENERAL NAME	Light ribbon-/hose/-strip
ETIM CLASS	Light ribbon-/hose/-strip EC002706
ETIM GROUP	41 Domestic light fittings
COLOUR	Black
LAMP TYPE	LED

SPECIFICATIONS

PRODUCT DIMENSIONS	2000.0 x 23.0 x 17.4
MOUNTING METHOD	Surface mounting
COLOUR TEMPERATURE	4000 K
COLOUR RENDERING INDEX CRI	> 85
RATED LIFE TIME	
ENERGY EFFICIENCY CLASS	
LUMINOUS FLUX	1512 lm/m
EFFICIENCY	126 lm/W
VOLTAGE	24 V DC
INGRESS PROTECTION CODE	IP44
NUMBER OF LEDS/M	
INPUT POWER	48 W
NUMBER OF SWITCHING CYCLES	> 50 000
AMBIENT TEMPERATURE RANGE	-20°C -+50°C
INPUT POWER CONNECTOR	
WARRANTY PERIOD (MONTHS)	24
ADDITIONAL COVER (MONTHS)	12
INSTALLATION AND OPERATING MANUAL	https://www.limente.fi/Images/productpics/instructions/limente_led-luxor.pdf

LUXOR 40 COM 4K BL PROF.LIGHT

RECOMMENDED ACCESSORIES

PRODUCT CODE	PRODUCT
LED28030	LIMENTE POWER SUPPLY, WHITE, 24 V, 30W, INTEGRATED CONNECTORS
LED28060	LIMENTE POWER SUPPLY, WHITE, 24 V, 60W, INTEGRATED CONNECTORS
LED28100	LIMENTE POWER SUPPLY, WHITE, 24 V, 100W, INTEGRATED CONNECTORS
640551	SMART 551, LUXUS LIGHTCONTROL KIT, 24 V, WHITE
640552	SMART 552, LUXUS LIGHTCONTROL KIT, 24 V, WHITE
640554	SMART 554, LUXUS LIGHTCONTROL KIT, 24 V, BLACK
640556	SMART 556, GREENLINE LIGHTCONTROL KIT, 24 V, WHITE
640557	SMART 557, GREENLINE LIGHTCONTROL KIT, 24 V, WHITE
640425	SMART 425, WIRELESS LIGHT CONTROL

LUXOR 40 COM 4K BL PROF.LIGHT

LIMENTE LED-LUXOR

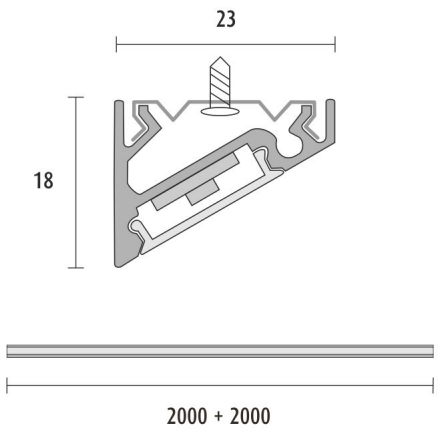

LUXOR 40 COM 4K BL PROF.LIGHT

LUXOR COM + Smart 512

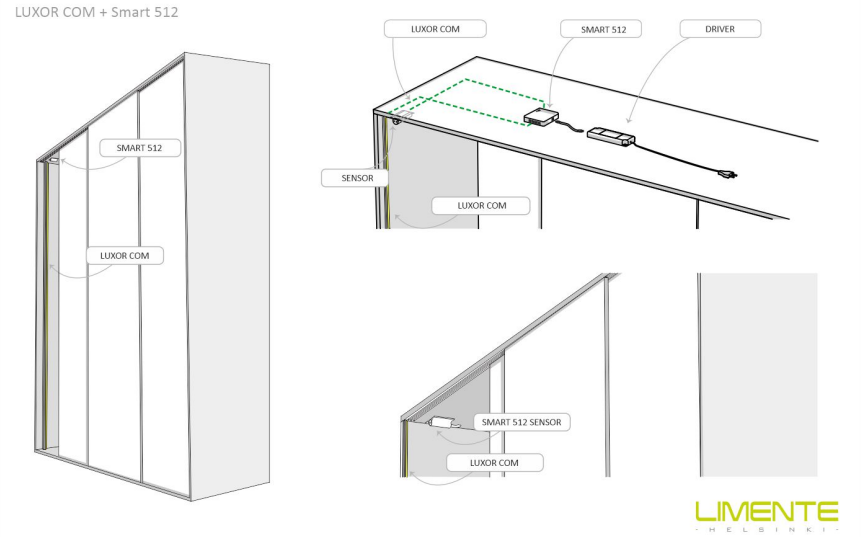

Luxa-31 + Luxor

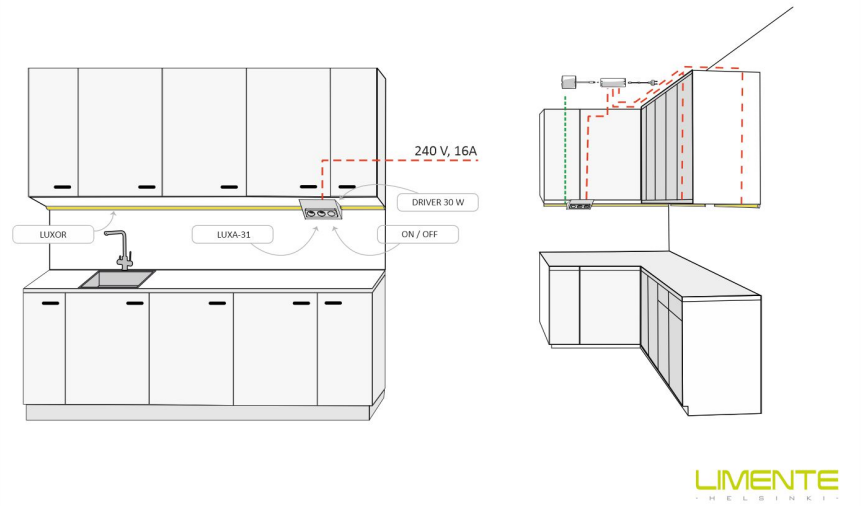
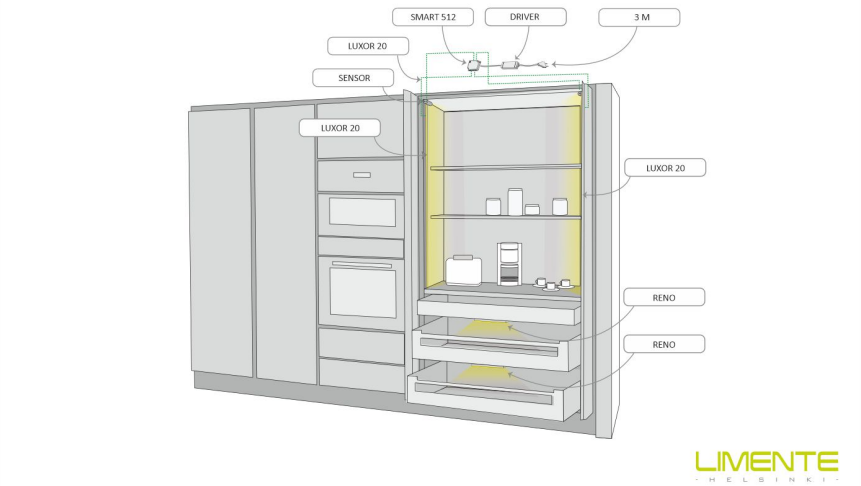
Luxor + Smart 512