PICK-1

USB (A+C) | white
Product code: 67005

A compact recessed USB socket

The round PICK-1 is a compact USB socket (USB-A and USB-C) that is a part of the LIMENTE PICK product series. LIMENTE PICK products are USB sockets (USB-A and USB-C) that are small in size and designed to be embedded in, for example, shelves, furniture, and tabletops. Thanks to their small size and plug-in power supply LIMENTE PICK products can also be used in other types of furniture, such as tables, sofas, and bookshelves.

The PICK product series includes four different models: the round PICK-1, the square PICK-2, the rectangular PICK-3, and PICK-4 which is a rectangular socket with rounded corners.

Color options

All PICK USB sockets have a metal frame. The sockets are available in stainless steel, black, and white, as well as in the striking new colors bronze, gold, and champagne. The sockets are attractive interior design elements especially due to their new, stylish color collection.

Installation and electrical connection

PICK-1 USB socket is quick and easy to install. A round opening is made in the tabletop or, e.g., side of an island, into which the socket is placed. The power supply, which is included in delivery, is then connected to the socket. Installation does not require an electrician. The power consumption of USB ports in Pick sockets in standby mode is <0.3W.

THE FOLLOWING ITEMS ARE INCLUDED

- USB charger
- 2m supply cable
- plug-in power supply

PICK-1 SOCKET WHITE

OVERVIEW

PRODUCT CODE	67005
GTIN-CODE	8028067062733
ELECTRICAL NUMBER	2529567
ETIM GENERAL NAME	Socket
ETIM CLASS	Socket outlet EC000125
ETIM GROUP	25 Flush sockets
COLOUR	
LAMP TYPE	

SPECIFICATIONS

PRODUCT DIMENSIONS	42.0 x 42.0 x 35.0
MOUNTING METHOD	Flush mounting
COLOUR TEMPERATURE	
COLOUR RENDERING INDEX CRI	
RATED LIFE TIME	
ENERGY EFFICIENCY CLASS	
LUMINOUS FLUX	
EFFICIENCY	
VOLTAGE	240 V
INGRESS PROTECTION CODE	IP20
NUMBER OF LEDS/M	
INPUT POWER	
NUMBER OF SWITCHING CYCLES	
AMBIENT TEMPERATURE RANGE	0°C~40°C
INPUT POWER CONNECTOR	
WARRANTY PERIOD (MONTHS)	24
ADDITIONAL COVER (MONTHS)	
INSTALLATION AND OPERATING MANUAL	http://www.limente.fi/Images/productpics/instructions/Limente_PICK_USB_AC.pdf

PICK-1 SOCKET WHITE

LIMENTE PICK-1

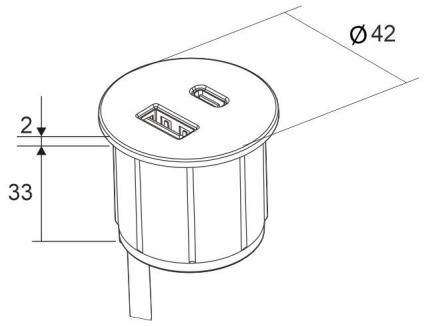
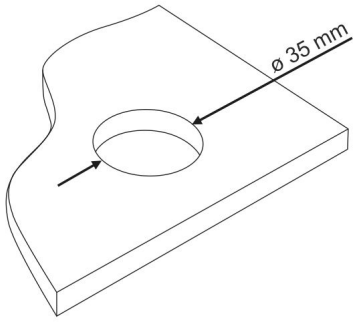
LIMENTE PICK-1