LENOX

3000 K | black | 280lm | CRI>90
Product code: 65259S4

A modern furniture light fixture

LIMENTE LENOX is a beautiful, traditional light fixture with a modern design. The light is wide-spread and pleasant, which makes LENOX an excellent choice for a kitchen workspace, in showcases and on shelves. The stainless-steel finish makes LENOX a modern, timeless choice. LIMENTE LENOX can be installed either recessed or surface-mounted. The high-quality, metallic fixture is available in matte white, matte black, stainless steel or brass color

All LIMENTE LENOX fixtures use a new technique, which makes the light provided even and excellent in color temperature. This generates optimal light and is easy and pleasant on the eyes. Due to their amazing luminosity, the fixtures can be placed up to 60-80cm apart! When the fixtures are placed on both sides of the cooker hood, you are able to receive excellent lighting to your cooktop.

Dimming and lighting control

Appropriate lighting for any occasion is made easy with our dimming and lighting control system. You can easily change the lighting and ambience in your home from efficient and bright to dim and cosy by dimming your LIMENTE LENO 51 with our wireless system. You can use the same switch to adjust all the LIMENTE lights in the room, including various ceiling, panel and profile lights. The light adjusts smoothly at the same time while creating ambience for working, entertaining or any mood in between.

Learn more from our website

Easy installation

LIMENTE LENO 51 is quick and easy to install. You can either install the fixture recessed or surface-mounted.

Learn more from our website

THE FOLLOWING ITEMS ARE INCLUDED

- 4 x spotlight
- 4 x 3m cable with male TOP connector
- 4 x mounting ring
- screws
- driver
- Plastic Free packaging

LENOX 3K 4X4W BLACK SPOTLIGHT

OVERVIEW

PRODUCT CODE	65259S4
GTIN-CODE	6438400005846
ELECTRICAL NUMBER	4139975
ETIM GENERAL NAME	Furniture luminaire
ETIM CLASS	Downlight/spot/floodlight EC001744
ETIM GROUP	41 Domestic light fittings
COLOUR	Black
LAMP TYPE	LED

SPECIFICATIONS

PRODUCT DIMENSIONS	64.0 x 64.0 x 15.5
MOUNTING METHOD	Surface mounted/recessed mounted
COLOUR TEMPERATURE	3000 K
COLOUR RENDERING INDEX CRI	> 90
RATED LIFE TIME	
ENERGY EFFICIENCY CLASS	
LUMINOUS FLUX	280 lm
EFFICIENCY	80 lm/W
VOLTAGE	24 V DC
INGRESS PROTECTION CODE	IP44/IP20
NUMBER OF LEDS/M	
INPUT POWER	4 W
NUMBER OF SWITCHING CYCLES	> 50 000
AMBIENT TEMPERATURE RANGE	-20°C~40°C
INPUT POWER CONNECTOR	
WARRANTY PERIOD (MONTHS)	24
ADDITIONAL COVER (MONTHS)	36
INSTALLATION AND OPERATING MANUAL	https://www.limente.fi/Images/productpics/instructions/limente_led-lenox.pdf

LENOX 3K 4X4W BLACK SPOTLIGHT

RECOMMENDED ACCESSORIES

PRODUCT CODE	PRODUCT
640532	SMART 532, CLASSIC LIGHTCONTROL KIT, 24 V, WHITE
640551	SMART 551, LUXUS LIGHTCONTROL KIT, 24 V, WHITE
640552	SMART 552, LUXUS LIGHTCONTROL KIT, 24 V, WHITE
640554	SMART 554, LUXUS LIGHTCONTROL KIT, 24 V, BLACK
640556	SMART 556, GREENLINE LIGHTCONTROL KIT, 24 V, WHITE
640557	SMART 557, GREENLINE LIGHTCONTROL KIT, 24 V, WHITE
640425	SMART 425, WIRELESS LIGHT CONTROL

LENOX 3K 4X4W BLACK SPOTLIGHT

LIMENTE LENOX

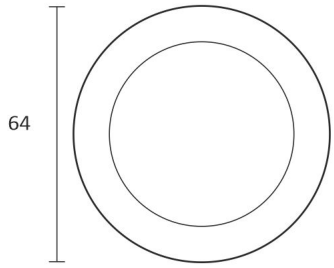

LIMENTE LENOX

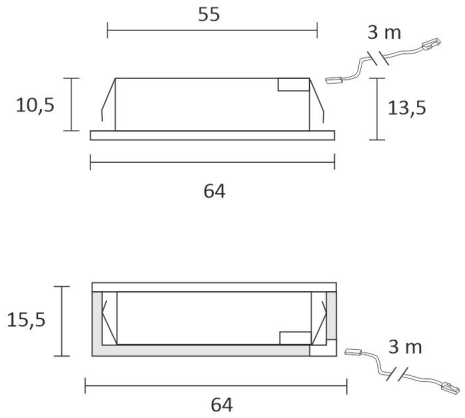

LIMENTE LENOX

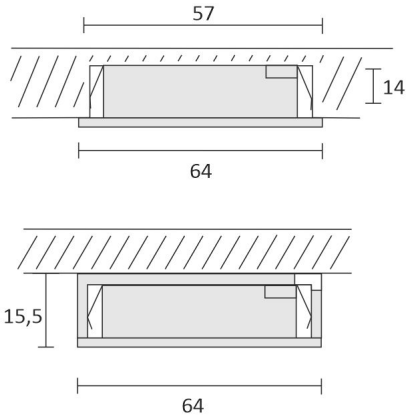
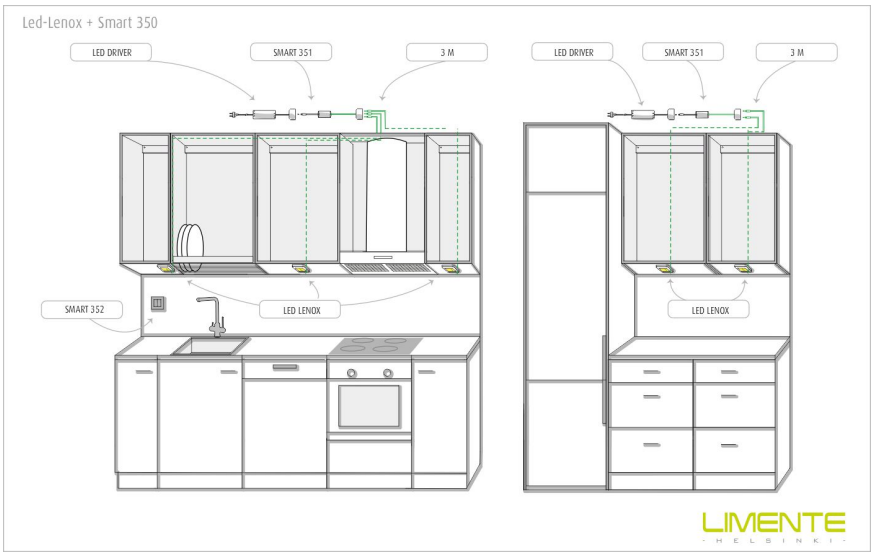
LENOX 3K 4X4W BLACK SPOTLIGHT