LUNA-2

socket | white | incl. switch
Product code: 631584

Double corner socket with an integrated light switc

The LIMENTE LUNA socket is designed in Finland to provide as a versatile and stylish power outlet over the kitchen counter, under the upper cabinets. It is fast and simple to install and it can be used with all types of lights. The tilted design makes the sockets easy to access and you can clearly see in which direction the plug should be inserted. The LUNA sockets have place for two plugs and there is an on / off -switch to control a separate driver at the end of the cable. Use the switch to easily and affordably control, for example, the working lights over the kitchen counter. By combining the LIMENTE LUNA with LIMENTE profile lights, you can create a stylish interior detail in the kitchen. All sockets are either stainless steel or painted white or black (metal frame) and are child proof.

With LIMENTE LUNA, you can easily change a conventional socket + fluorescent lamp combination into a more modern LED lighting without larger electrical work. LIMENTE LUNA is installed in place of the fluorescent lamp and the LUNA sockets replace the sockets and switch. Additionally, you will need any LIMENTE light that you connect to the LUNA socket with a separate power supply. These lights are controlled from the switch that is on the side of LIMENTE LUNA socket.

Color choices

LIMENTE LUNA-2 is available in three different colors: stainless steel, white, and black.

Installation and electrical connection

Define the place where the power supply is to be imported or use an existing power supply cable. The socket must be installed against an angle of two fixed surfaces so that its background is not left open. The actual mounting is made using the supplied screws. See the installation instructions for more details.

Learn more from our website

THE FOLLOWING ITEMS ARE INCLUDED

- double socket
- Eurosocket, which is controlled by a switch
- back plate
- quick connector for connection
- plastic free packaging

LUNA-2 SOCKET SWITCH WH

OVERVIEW

PRODUCT CODE	631584
GTIN-CODE	6430022829275
ELECTRICAL NUMBER	2407111
ETIM GENERAL NAME	Socket outlet+switch
ETIM CLASS	Socket outlet EC000125
ETIM GROUP	24 Surface mounting socket-outlets and plugs
COLOUR	White
LAMP TYPE	-

SPECIFICATIONS

PRODUCT DIMENSIONS	160.0 x 150.0 x 58.0
MOUNTING METHOD	Surface mounting, Fixed installation
COLOUR TEMPERATURE	
COLOUR RENDERING INDEX CRI	-
RATED LIFE TIME	
ENERGY EFFICIENCY CLASS	
LUMINOUS FLUX	-
EFFICIENCY	-
VOLTAGE	240 V
INGRESS PROTECTION CODE	IP20
NUMBER OF LEDS/M	
INPUT POWER	-
NUMBER OF SWITCHING CYCLES	-
AMBIENT TEMPERATURE RANGE	-20°C~50°C
INPUT POWER CONNECTOR	
WARRANTY PERIOD (MONTHS)	24
ADDITIONAL COVER (MONTHS)	-
INSTALLATION AND OPERATING MANUAL	http://www.limente.fi/Images/productpics/instructions/limente_mini-2_mini-2C-USB_mini-3_luna-2.pdf

LUNA-2 SOCKET SWITCH WH

LIMENTE LUNA

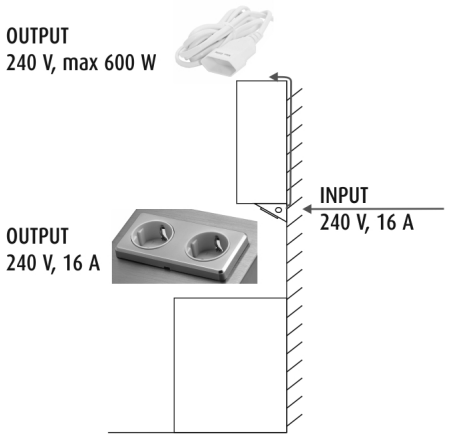

LIMENTE LUNA

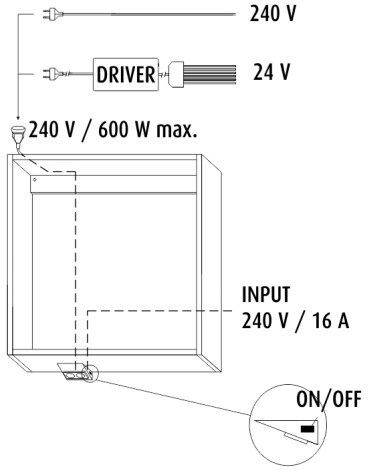

LIMENTE LUNA

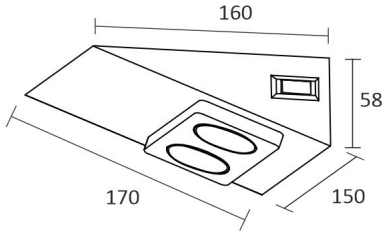
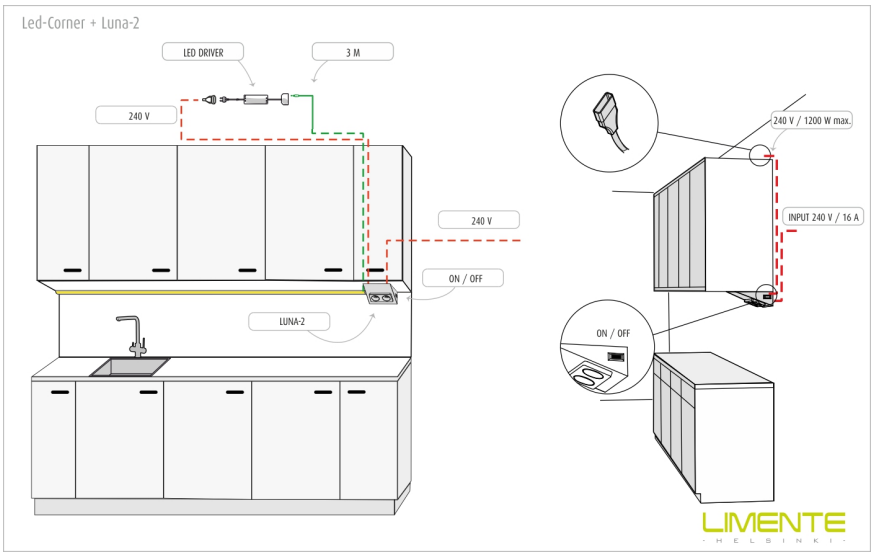
LUNA-2 SOCKET SWITCH WH