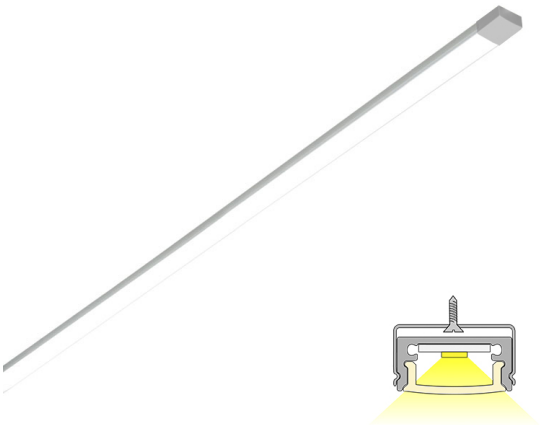

PROFIL

aluminium | 4000 K | 974 lm
Product code: 62708

An extremely low and efficient profile fixture

LIMENTE PROFIL LUX is a part of LIMENTE LUX collection. The LIMENTE LUX collection provides the best quality of light in technical features, such as efficiency and color rendering, and maximizes the lifespan of the product. PROFIL LUX is a simple and cost-efficient choice to light up your kitchen! The led profile is available in five different standard lengths. The fixture has an IP44 classification, which makes it possible to be installed under a drying cabinet. Due to the excellent light output, the profile fixtures can be placed even 60-80cm apart! You'll receive excellent light on your cooktop, when the fixtures are placed on both sides of the cooker hood.

LIMENTE PROFIL LUX has a perfect color rendering (Ra>90). The fixture has a light output of 1100 lm/m and a color temperature of 4000K. Due to the excellent technical values, our LUX models reproduce natural colors optimally, which really makes colors come alive! The products in our LIMENTE LUX collection are all granted with a three-year additional warranty in addition to our two-year warranty granted for all our products.

Learn more from our website

Dimming and lighting control

Appropriate lighting for any occasion is made easy with our dimming and lighting control system. You can easily change the lighting and ambience in your home from efficient and bright to dim and cozy by dimming your LIMENTE PROFIL LUX with our wireless system. You can use the same switch to adjust all the LIMENTE lights in the room, including various ceiling, panel and profile lights. The light adjusts smoothly at the same time while creating ambience for working, entertaining or any mood in between.

Learn more from our website

Installation

LIMENTE PROFIL LUX is fast and easy to install with the installation parts included.

Learn more from our website

THE FOLLOWING ITEMS ARE INCLUDED

- lamp with quick connector
- 3 m power cord
- cable tray
- fasteners x 4

PROFIL 87 AL PROFILE LIGHT

OVERVIEW

PRODUCT CODE	62708
GTIN-CODE	6438400000605
ELECTRICAL NUMBER	4129651
ETIM GENERAL NAME	Light ribbon-/hose/-strip
ETIM CLASS	Light ribbon-/hose/-strip EC002706
ETIM GROUP	41 Domestic light fittings
COLOUR	Alulook
LAMP TYPE	LED

SPECIFICATIONS

PRODUCT DIMENSIONS	870.0 x 17.0 x 8.0
MOUNTING METHOD	Surface mounting
COLOUR TEMPERATURE	4000 K
COLOUR RENDERING INDEX CRI	> 95
RATED LIFE TIME	
ENERGY EFFICIENCY CLASS	
LUMINOUS FLUX	974 lm
EFFICIENCY	97 lm/W
VOLTAGE	24 V DC
INGRESS PROTECTION CODE	IP44
NUMBER OF LEDS/M	
INPUT POWER	10 W
NUMBER OF SWITCHING CYCLES	> 50 000
AMBIENT TEMPERATURE RANGE	-20°C~50°C
INPUT POWER CONNECTOR	
WARRANTY PERIOD (MONTHS)	24
ADDITIONAL COVER (MONTHS)	36
INSTALLATION AND OPERATING MANUAL	https://www.limente.fi/Images/productpics/instructions/limente_led-profil-lux.pdf

PROFIL 87 AL PROFILE LIGHT

RECOMMENDED ACCESSORIES

PRODUCT CODE	PRODUCT
LED28030	LIMENTE POWER SUPPLY, WHITE, 24 V, 30W, INTEGRATED CONNECTORS
LED28060	LIMENTE POWER SUPPLY, WHITE, 24 V, 60W, INTEGRATED CONNECTORS
LED28100	LIMENTE POWER SUPPLY, WHITE, 24 V, 100W, INTEGRATED CONNECTORS
640551	SMART 551, LUXUS LIGHTCONTROL KIT, 24 V, WHITE
640552	SMART 552, LUXUS LIGHTCONTROL KIT, 24 V, WHITE
640554	SMART 554, LUXUS LIGHTCONTROL KIT, 24 V, BLACK
640556	SMART 556, GREENLINE LIGHTCONTROL KIT, 24 V, WHITE
640557	SMART 557, GREENLINE LIGHTCONTROL KIT, 24 V, WHITE
640425	SMART 425, WIRELESS LIGHT CONTROL
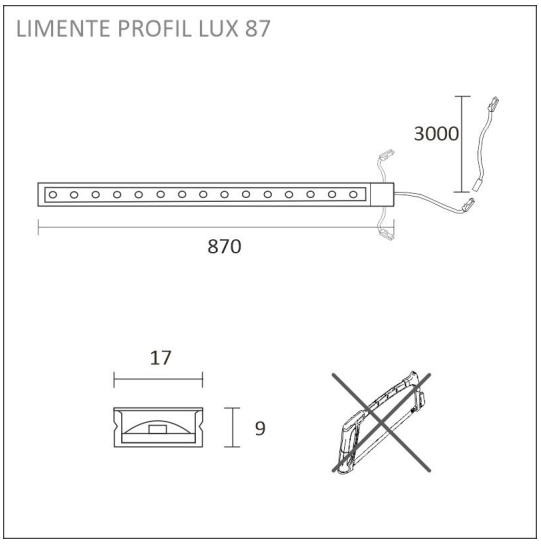
PROFIL 87 AL PROFILE LIGHT