LAPETEK www.lapetek.fi

LAPETEK APOLLO-V X2
(AC) island white

Product code 591ACX2

Product description

A timelessly elegant, high-quality and easy-to-use cooker hood in the version that controls a rooftop ventilation fan. Always attached to the ceiling, can be installed next to the wall or on top of the island. Easy to use, backlit Soft Touch buttons, efficient and dimmable LED lights and easy-to-clean grease and activated carbon filters. The adjustable timer function ensures that the steam will be removed even after cooking has stopped.

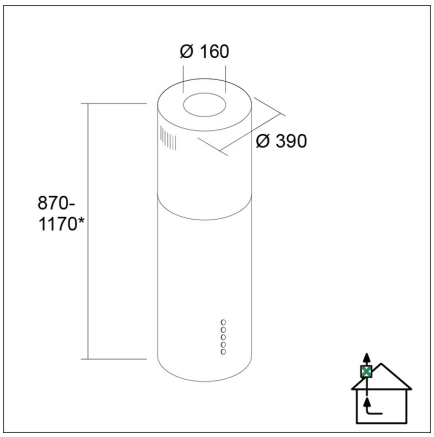

Technical information

- Ventilation system: X2-AC - kitchen+bath extraction
- With the air chimney extension: -
- Cooker hood width: 35 - 55 cm
- Cooker hood color: White
- Suitable for the room height: 232 - 282 cm
- Electrical connection: Socket 10 A

Delivery content

- cooker hood
- AC-motor
- telescopic chimney
- booster flap

Downloads

- Kuvun käyttö- ja asennusohje
- Service manual

Recommended accessories

Condens water
Read more >>

Differential pressure
Read more >>

Date: 16.04.2024