PIU LIGHT
80 cm island light beige

Product code 430130

Product description

The Piu Light cooker hood combines a classic and elegant design with top-notch practicality. The pendant light-like cooker hood is perfect for a trendy or more classic style kitchen .You don't need to touch the device, as a simple hand movement is enough to turn the kitchen hood on and off, change the operating mode, and adjust the lighting. It's available in two sizes, 60 cm and 80 cm, in black, gold, and light beige.

Technical information

- Ventilation system: Own motor
- Cooker hood width: 80 cm
- Cooker hood color: Beige
- Electrical connection: Socket 10 A

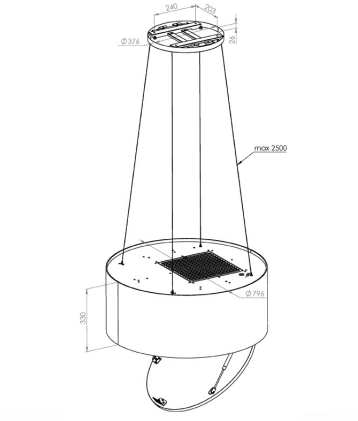

Delivery content
- cooker hood
- remote control
- charcoalfilter

Downloads
- Kuvun asennus- ja käyttöohje

Recommended accessories