SELECT II 60/2 ORGA

19 + 30 l bins

Product code 411767

Product description

A modern and stylish, very versatile waste system that takes into account the ease of waste sorting. You only need a sink cabinet with a suitable width and a door in the middle of which the drawer is installed. The stylish waste cart contains high-quality buckets, sliding mechanisms and a frame. The waste baskets that come in the cart are sturdy and can withstand even heavier waste.

Technical information

- Sink cabin width: 60 cm
- Installation: Wagon model

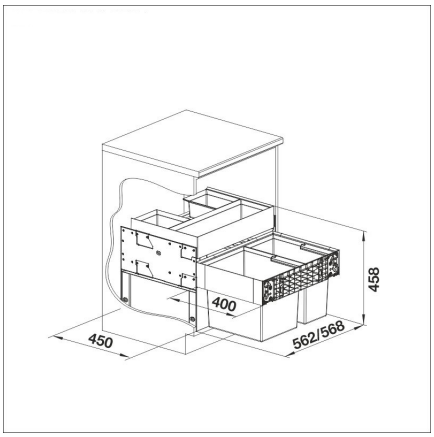

Delivery content

- frame
- sliding mechanism
- 19 l bin
- 30 l bin
- cover

Downloads

- Roskisten käyttö- ja asennusohje
- Material information

Recommended accessories

Accessory box, little
Read more >>

SELECT II 60/2 update
Read more >>

MOVEX
Read more >>

CLIP for waste bag
Read more >>

Bin
Read more >>