LAPETEK www.lapetek.fi

FLEXON II 60/3 XL

30 l + 2 x 8 l bins

Product code 401785

Product description

Technical information

- Sink cabin width: 60 cm

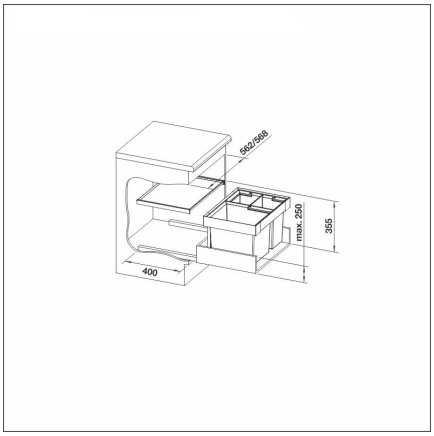

Delivery content

- frame
- assembly kit
- 30 l bin
- 2 x 8 l bins
- cover

Downloads

- Roskisten käyttö- ja asennusohje

Recommended accessories

Accessory box, little
Read more >>

MOVEX
Read more >>

CLIP for waste bag
Read more >>

Lid for wastebin
Read more >>

Bin
Read more >>

Date: 16.04.2024