BLANCO CLARON 340-U DURINOX

Stainless steel Durinox

Product code 3570

INFINO

Product description

BLANCO STEELAERT

Blanco SteelArt product range covers a broad range of high class and carefully thought sinks made of stainless steel. Every sink is made individually with high expertise and the newest production technology have been used. The sink hasn elegant-pure design with no visible base pattern.

Technical information

- Sink cabin min. length: 40 cm
- Allasmateriaali: Durinox - ruostumaton teräs
- Sink installation method: Bottom mounted
- Waste: 3,5" basket strainer InFino no pop-up
- Depth of main sink: 190 mm

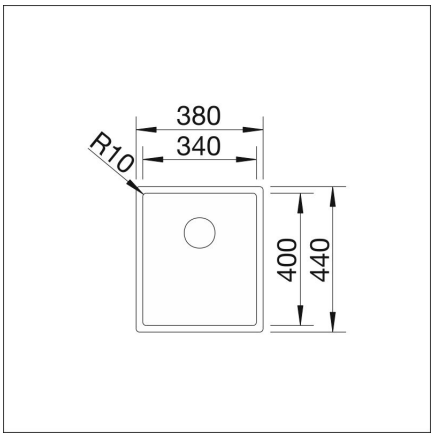

Delivery content

- BLANCO stainless steel sink
- bottom valve system
- domestic Prevex Smartloc water trap

Downloads

- Assembling instruction
- Prevex Smartloc instructions
- Service manual
- Material information
- Cutout dimensions
- Vaatimustenmukaisuusvakuutus
- InFino waste

Recommended accessories

Set top-rails
Read more >>

Cutting board
Read more >>

Cutting board
Read more >>

Pop up set InFino
Read more >>

Pop up set InFino
Read more >>