LAPETEK VAILA

Product code 301360

Product description

Technical information

- With active coal: 224 - 272 cm
- Ventilation system: Own motor
- With the air chimney extension: max. 285 cm
- Cooker hood width: 90 cm
- Cooker hood color: Stainless steel
- Suitable for the room height: 211 - 272 cm
- Electrical connection: Socket 10 A

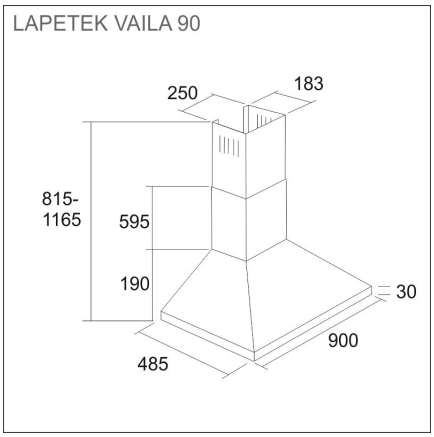

Delivery content

Downloads

- Kuvun asennus- ja käyttöohje

Recommended accessories

charcoal filter
Read more >>

Differential pressure
Read more >>