BLANCO SUBLINE 800-U
Silgranit rock grey

Product code 23711

Product description

A stylish and timeless sink model that fits both modern and traditional kitchens. The depth of the sink (190 mm) and the small corner rounding make the sink practical and easy to keep clean. The material is the unique, almost scratch-resistant SILGRANIT stone mass developed by Blanco, which is heat-resistant, retains its color and is easy to clean. The patent-protected SILGRANIT material combines ease of care, practicality and durability.

Technical information

- Sink cabin min. length: 90 cm
- Allasmateriaali: kivikomposiitti
- Sink installation method: Bottom mounted
- Sink color: Silgranit rock grey
- Waste: 3,5" basket strainer InFino no pop-up
- Depth of main sink: 220 mm

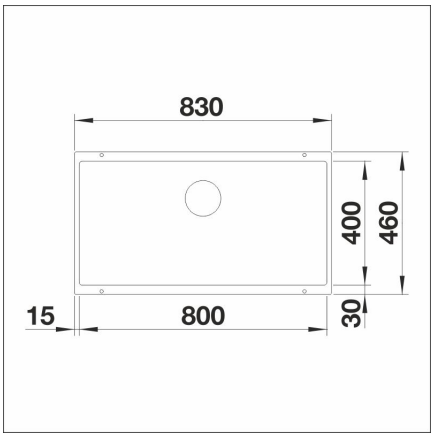

Delivery content

- BLANCO Silgranit sink
- bottom valve system
- domestic Prevex Smartloc water trap

Downloads

- Assembling instruction
- Prevex Smartloc instructions
- Service manual
- Material information
- Cutout dimensions
- Vaatimustenmukaisuusvakuutus
- InFino waste

Recommended accessories

InFino set
Read more >>

Cutting board
Read more >>

Cutting board
Read more >>

Pop up set InFino
Read more >>

Pop up set InFino
Read more >>