# LAPETEK LINO-SA
chrome dishwasher valve

## Product code 21931SA

### Product description

The pull-out shower head increases functionality at the pool point and the faucet's range increases when the head of the shower can be pulled out and it can be moved freely in the pool. The conveniently movable shower head of the faucet enables water to be supplied to every corner of the basin and to fill large containers or pots even on the work surface.

### Technical information

- Dish washer valve: Yes
- Tap color: Chromed
- Tap hole: 35 mm
- Spout limiter: 60 - 270 degrees
- Type approval: FI
- Sound level: Class 1

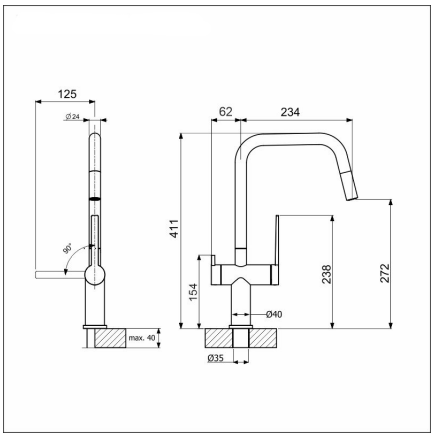


### Delivery content
- LAPETEK Lino-SA faucet with dishwasher valve

### Downloads
- Assembling instructions
- Service manual
- Material information
- Type approval

### Recommended accessories

**Replacement**
Read more >>

**Stabilation plate 75**
Read more >>

**Flow regulator**
Read more >>