BLANCO NAYA 5 +
LAPETEK ROUND-A alumetallic

Product code 13909K2

Product description

A ready-made sink+faucet set, with which you can easily choose a stylish, functional and safe combination for your kitchen at an affordable package price. The set includes a large-sized, top-mounted Naya basin and a Lapetek faucet, which together form a multi-purpose and space-optimal whole. The set's faucet has a stylish dishwasher connection and Finnish type approval.

Technical information

- Sink cabin min. length: 50 cm
- Sink installation method: Over mounted
- Sink color: Silgranit® anthrazit (musta)
- Waste: 3,5" basket strainer no pop-up
- Depth of main sink: 200 mm

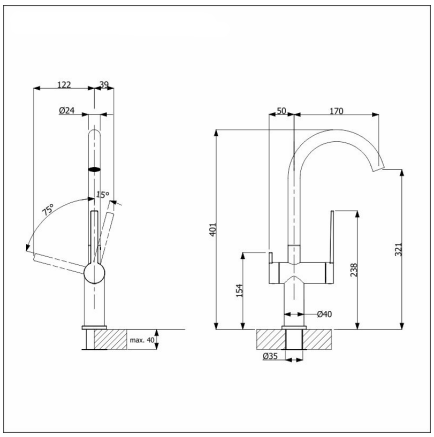

Delivery content

- Silgranit sink
- bottom valve system
- domestic Prevex Smartloc water trap
- Round-A-faucet

Downloads

- Assembling instructions
- Hanan asennus- ja käyttöohje
- Prevex Smartloc instructions
- Service manual
- Material information
- Cutout dimensions
- Vaatimustenmukaisuusvakuutus

Recommended accessories

Cutting board
Read more >>

Colander
Read more >>

Cutting board
Read more >>

Pop up set round
Read more >>

Colander
Read more >>