BLANCO ZIA 6 S
Silgranit soft white

Product code 13437

Product description

COMFORT AND QUALITY IN AN ATTRACTIVE SETTING

Zia is a sink with modern design and clear lines. The straight lined outer contour is emphasized by a narrow rim. Silgranit is a sink material developed and patented by BLANCO. It provides the sink an unsurpassed hardness and scratch resistance. Silgranit is hygienic and easy to take care off.

Technical information

- Sink cabin min. length: 60 cm
- Allasmateriaali: kivikomposiitti
- Sink installation method: Over mounted
- Waste: 3,5" basket strainer no pop-up
- Depth of main sink: 190 mm

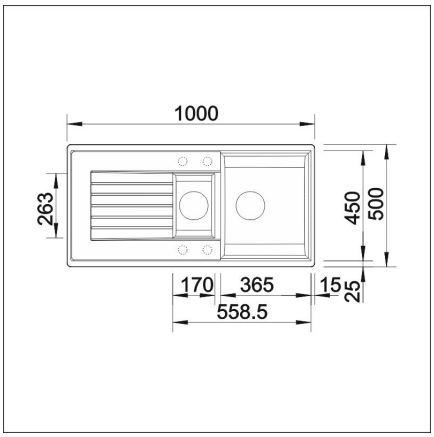

Delivery content

- BLANCO Silgranit sink
- bottom valve system
- domestic Prevex Smartloc water trap

Downloads

- Assembling instruction
- Prevex Smartloc instructions
- Service manual
- Material information
- Cutout dimensions
- Vaatimustenmukaisuusvakuutus

Recommended accessories

InFino set
Read more >>

Cutting board
Read more >>

Foldable Grid
Read more >>

Colander
Read more >>

Crockery basket
Read more >>