BLANCO ZIA 45 S
Silgranit® white

Product code 13412

Product description

COMFORT AND QUALITY IN AN ATTRACTIVE SETTING

Zia is a sink with modern design and clear lines. The straight lined outer contour is emphasized by a narrow rim. Silgranit® is a sink material developed and patented by BLANCO. It provides the sink an unsurpassed hardness and scratch resistance. Silgranit® is hygienic and easy to take care off.

Technical information

- Sink cabin min. length: 45 cm
- Sink installation method: Over mounted
- Sink color: Silgranit® valkoinen
- Waste: 3,5" basket strainer no pop-up
- Depth of main sink: 190 mm

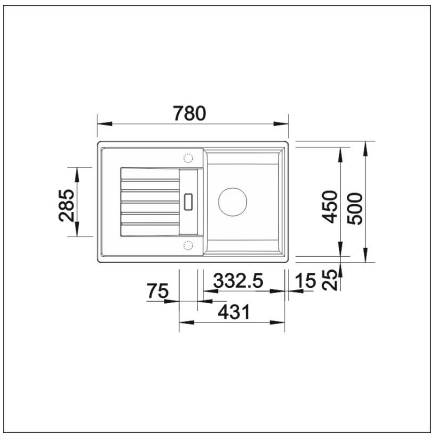

Delivery content

Downloads
- Assembling instruction
- Prevex Smartloc instructions
- Service manual
- Material information
- Cutout dimensions

Recommended accessories

Cutting board
Read more >>

Crockery basket
Read more >>

Foldable Grid
Read more >>

CapFlow
Read more >>

LAPETEK VENTO
Read more >>