# BLANCO SUBLINE 430/270-U
Silgranit soft white

## Product code 12207

INFINO

### Product description

A stylish and timeless sink model that fits both modern and traditional kitchens. The depth of the sink (190 mm) and the small corner rounding make the sink practical and easy to keep clean. The material is the unique, almost scratch-resistant SILGRANIT stone mass developed by Blanco, which is heat-resistant, retains its color and is easy to clean. The patent-protected SILGRANIT material combines ease of care, practicality and durability.

### Technical information

- Sink cabin min. length: 80 cm
- Allasmateriaali: kivikomposiitti
- Sink installation method: Bottom mounted
- Sink color: Silgranit soft white
- Waste: 3,5" basket strainer InFino no pop-up
- Depth of main sink: 200 mm

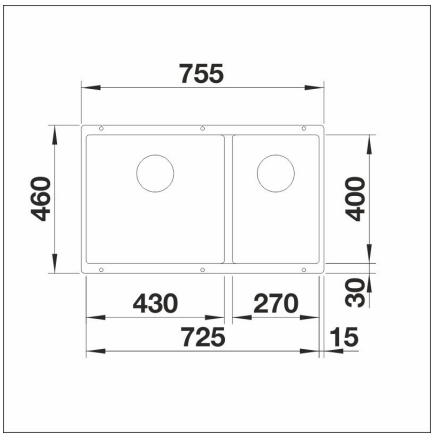


### Delivery content

- BLANCO Silgranit sink
- bottom valve system
- domestic Prevex Smartloc water trap

### Downloads

- Assembling instruction
- Prevex Smartloc instructions
- Service manual
- Material information
- Cutout dimensions
- Vaatimustenmukaisuusvakuutus
- InFino waste

### Recommended accessories

**Set top-rails**
Read more >>

**Cutting board**
Read more >>

**Foldable Grid**
Read more >>

**Cutting board**
Read more >>

**Pop up set InFino**
Read more >>

Date: 12.09.2024