BLANCO LEGRA 6
LAPETEK LINO-A alumetallic

Product code 12100K1

Product description

Now you can buy the Legra basin and the matching Lapetek faucet also as an easy set! In these functional UNIT sets, we have thought through everything down to the details to ensure a functional, safe and stylish whole. This way you can be sure that the products you choose work together in the best possible way, making your kitchen sink a functional place where it's comfortable to cook and take care of everyday cleaning tasks.

Technical information

- Sink installation method: Over mounted
- Waste: 3,5" basket strainer no pop-up
- Depth of main sink: 190 mm

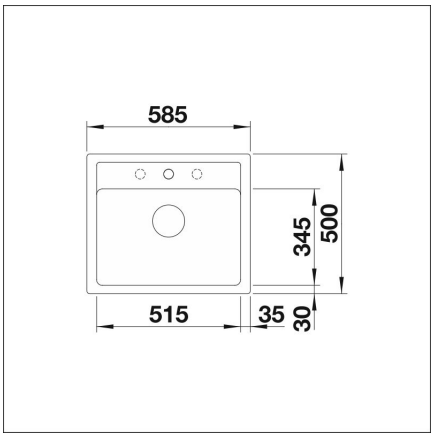

Delivery content

Downloads
- Assembling instructions
- Hanan asennus- ja käyttöohje
- Prevex Smartloc instructions
- Service manual
- Material information
- Cutout dimensions
- InFino waste

Recommended accessories

Crockery basket
Read more >>

Foldable Grid
Read more >>

CapFlow
Read more >>

LATO
Read more >>

Cutting board
Read more >>