BLANCO PALONA 6
Ceramic kristall white

Product code 11815

Product description

The elegantly designed, spacious BLANCO PALONA basin fits perfectly into a modern kitchen. Its deeper than usual basin makes it easier to take care of chores and you can easily rinse even a large pot in it. The sink material is smooth and hygienic stone ceramic. Stone ceramic basins are traditional handmade mass basins with a very hard and silky shiny surface. Thanks to the thickness of the material, the sinks are quiet and pleasant to use.

Technical information

- Sink cabin min. length: 60 cm
- Allasmateriaali: kivikeramiikka
- Sink color: Ceramic crystal white glossy
- Waste: 3,5" basket strainer InFino pop-up
- Depth of main sink: 190 mm

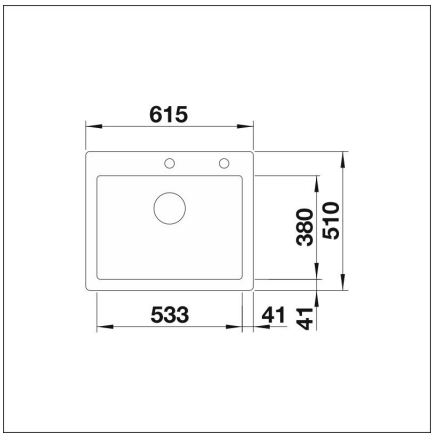

Delivery content

- BLANCO ceramic sink
- bottom valve system
- domestic Prevex Smartloc water trap

Downloads

- Assembling instruction
- Prevex Smartloc instructions
- Service manual
- Material information
- Cutout dimensions
- Vaatimustenmukaisuusvakuutus
- InFino waste

Recommended accessories

Cutting board
Read more >>

Foldable Grid
Read more >>

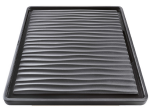

draining board
Read more >>

LINUS-S
Read more >>

LAPETEK VENTO
Read more >>