BLANCO ETAGON 6 +
LAPETEK ROUND-A matt black

Product code 111571K1

Product description

A ready-made sink+faucet set, with which you can easily choose a stylish, functional and safe combination for your kitchen at an affordable package price. The set includes a large, bottom-mounted Etagon basin and a Lapetek faucet, which together form a multi-purpose and space-optimal whole. The set's faucet has a stylish dishwasher connection and Finnish type approval.

Technical information

- Sink cabin min. length: 60 cm
- Waste: 3,5" basket strainer InFino no pop-up
- Depth of main sink: 220 mm

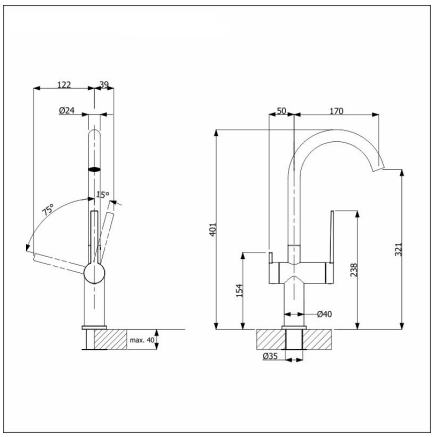

Delivery content

- Silgranit sink
- bottom valve system
- domestic Prevex Smartloc water trap
- Round-A-faucet

Downloads

- Assembling instructions
- Prevex Smartloc instructions
- Assembling instruction
- Huolto- ja hoito-ohje
- Material information
- Tap assembling instruction
- Cutout dimensions
- Declaration of conformity

Recommended accessories

Etagon 6 + Round-A,
Read more >>

Cutting board
Read more >>

Colander
Read more >>

InFino set
Read more >>

Colander
Read more >>