BLANCO ETAGON 6
Ceramic black

Product code 111520

INFINO

Product description

Practicality that makes everyday life easier on three working levels. The multifunctional rails that come as standard with the sink increase functionality. Thanks to the ingenious intermediate level and the standard Etagon rails included in the sink, the sink has three separate working levels: one at the bottom of the sink, another on the intermediate level and the third on top of the sink. With these levels, you can always work optimally in the sink, regardless of the size or shape of the dishes you use.

Technical information

- Sink cabin min. length: 60 cm
- Allasmateriaali: kivikeramiikka
- Sink color: Ceramic black
- Waste: 3,5" basket strainer InFino pop-up
- Depth of main sink: 220 mm

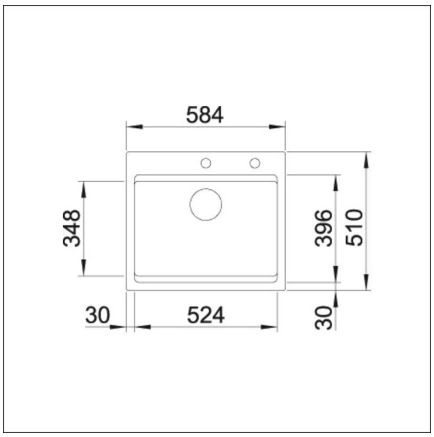

Delivery content

- BLANCO ceramic sink
- bottom valve system
- domestic Prevex Smartloc water trap

Downloads

- Assembling instruction
- Prevex Smartloc instructions
- Service manual
- Material information
- Cutout dimensions
- Vaatimustenmukaisuusvakuutus
- InFino waste

Recommended accessories

InFino set
Read more >>

InFino set
Read more >>

Cutting board
Read more >>

Pop up set InFino
Read more >>

Pop up set InFino
Read more >>