# BLANCO ETAGON 700-U +
LAPETEK LINO-A volcano-grey

## Product code 110109K7

### Product description

A ready-made sink+faucet set, with which you can easily choose a stylish, functional and safe combination for your kitchen at an affordable package price. The set includes a large, bottom-mounted Etagon basin and a Lapetek faucet, which together form a multi-purpose and space-optimal whole. The set's faucet has a stylish dishwasher connection and Finnish type approval.

### Technical information

- Sink cabin minimum length: 80 cm
- Sink installation method: Bottom mounted
- Waste: 3,5" basket strainer InFino no pop-up
- Depth of main sink: 200 mm

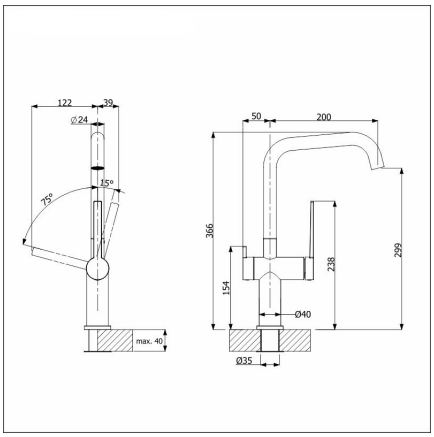


### Delivery content

- BLANCO Silgranit sink
- bottom valve system
- domestic Prevex Smartloc water trap
- Lino-A-faucet

### Downloads

- Assembling instructions
- Prevex Smartloc instructions
- Assembling instruction
- Huolto- ja hoito-ohje
- Material information
- Tap assembling instruction
- Cutout dimensions
- Declaration of conformity

### Recommended accessories

**Etagon 700-U + Lino-**
Read more >>

**Cutting board**
Read more >>

**Colander**
Read more >>

**InFino set**
Read more >>

**Colander**
Read more >>