BLANCO SUPRA 500-IFA
Stainless steel 18/10

Product code 106550IFA

Product description

The Blanco Supra product family includes a wide selection of high-quality and carefully finished sink models made of stainless steel. The design of the series is consistent, so the sinks can be combined to form a wide variety of entities. Pools can also be ordered separately as an additional sink. Supra is a clean-lined sink with an elegant design that suits a wide range of environments.

Technical information

- Sink cabin min. length: 60 cm
- Allasmateriaali: ruostumaton teräs
- Sink installation method: Huullettava, Päältä asennettava
- Waste: 3,5" basket strainer pop-up
- Depth of main sink: 175 mm

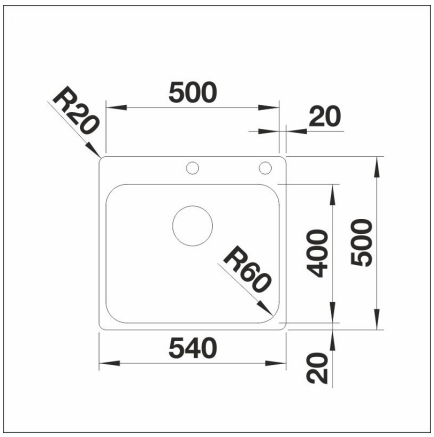

Delivery content

- BLANCO stainless steel sink
- bottom valve system
- domestic Prevex Smartloc water trap

Downloads

- Assembling instruction
- Prevex Smartloc instructions
- Service manual
- Material information
- Cutout dimensions
- Vaatimustenmukaisuusvakuutus

Recommended accessories

Pop up knob SteelArt
Read more >>

Crockery basket
Read more >>

Foldable Grid
Read more >>

CapFlow
Read more >>

LAPETEK LINO-SA
Read more >>