BLANCO DALAGO 45 +
LAPETEK LINO-A white

Product code 103702K1

Product description

A ready-made sink+faucet set, with which you can easily choose a stylish, functional and safe combination for your kitchen at an affordable package price. The set includes a large, top-mounted Dalago basin and a Lapetek faucet, which together form a multi-purpose and space-optimal whole. The set's faucet has a stylish dishwasher connection and Finnish type approval.

Technical information

- Sink cabin min. length: 45 cm
- Sink installation method: Over mounted
- Sink color: Silgranit® valkoinen
- Waste: 3,5" basket strainer pop-up
- Depth of main sink: 190 mm

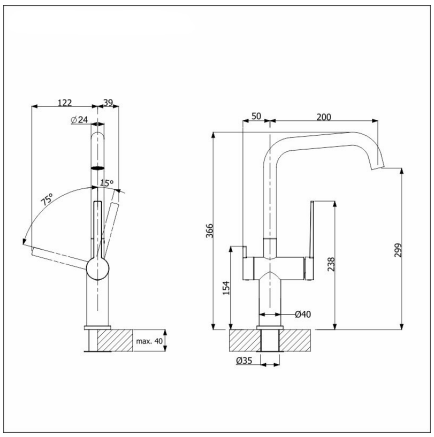

Delivery content

- BLANCO Silgranit sink
- bottom valve system
- domestic Prevex Smartloc water trap
- Lino-A-faucet

Downloads

- Assembling instructions
- Hanan käyttö- ja asennusohje
- Prevex Smartloc instructions
- Service manual
- Material information
- Cutout dimensions
- Vaatimustenmukaisuusvakuutus

Recommended accessories

Cutting board
Read more >>

Crockery basket
Read more >>

Cutting board
Read more >>

Dalago 45 + Lino-A,
Read more >>

Crockery basket
Read more >>