BLANCO DIVON II 6 S-IF
Stainless steel 18/10 left

Product code 1008IFV

INFINO

Product description

BLANCO STEELAERT

Blanco SteelArt product range covers a broad range of high class and carefully thought sinks made of stainless steel. Every sink is made individually with high expertise and the newest production technology have been used.

Technical information

- Sink cabin min. length: 60 cm
- Allasmateriaali: ruostumaton teräs
- Sink installation method: Päältä asennettava, Huullettava
- Waste: 3,5" basket strainer pop-up
- Depth of main sink: 195 mm

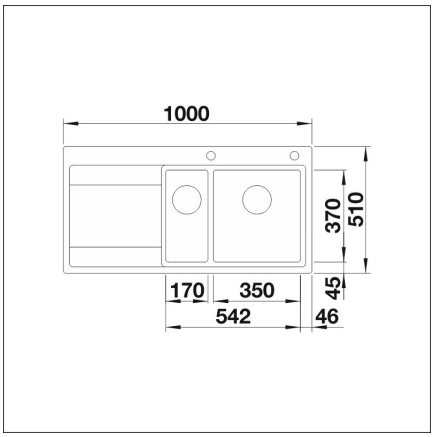

Delivery content

- BLANCO stainless steel sink
- bottom valve system
- domestic Prevex Smartloc water trap

Downloads

- Assembling instruction
- Prevex Smartloc instructions
- Service manual
- Material information
- Cutout dimensions
- Vaatimustenmukaisuusvakuutus
- InFino waste

Recommended accessories

Cutting board
Read more >>

Colander
Read more >>

Foldable Grid
Read more >>

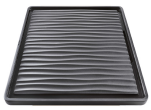

draining board
Read more >>

LAPETEK LINO-SA
Read more >>

Date: 15.03.2024